TYPE	OUTPUT		POLE	TIME RATING	VOLTAGE V	Hz	SYN.SPEED R.P.M
	HP.	kW.					
AEHH	300	223.8	2	CONT.	460	60	3600

TOTALLY ENCLOSED FAN-COOLED TYPE. SQUIRREL-CAGE ROTOR

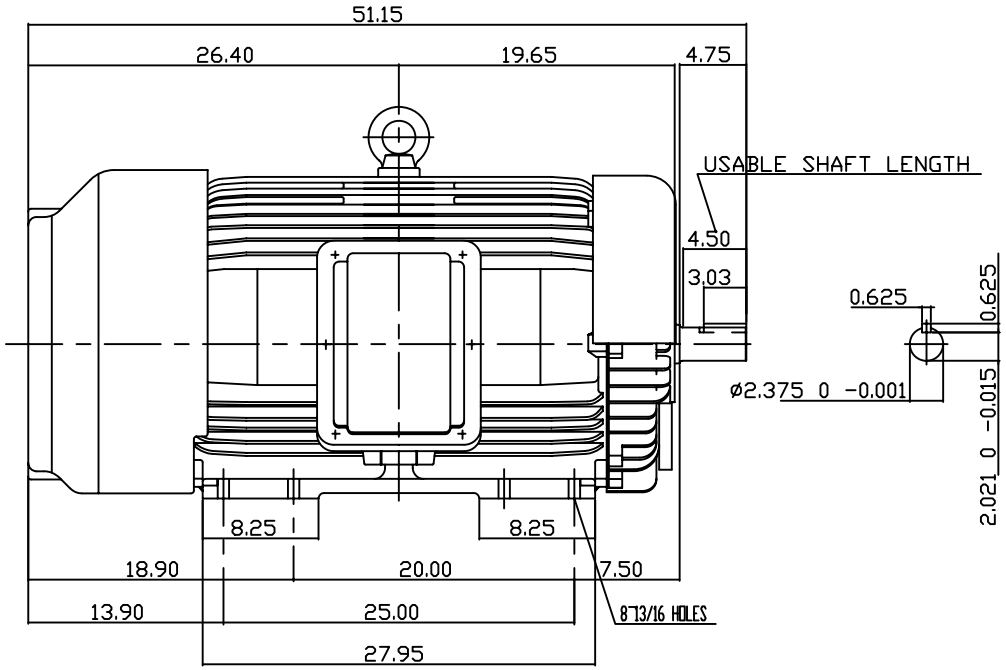

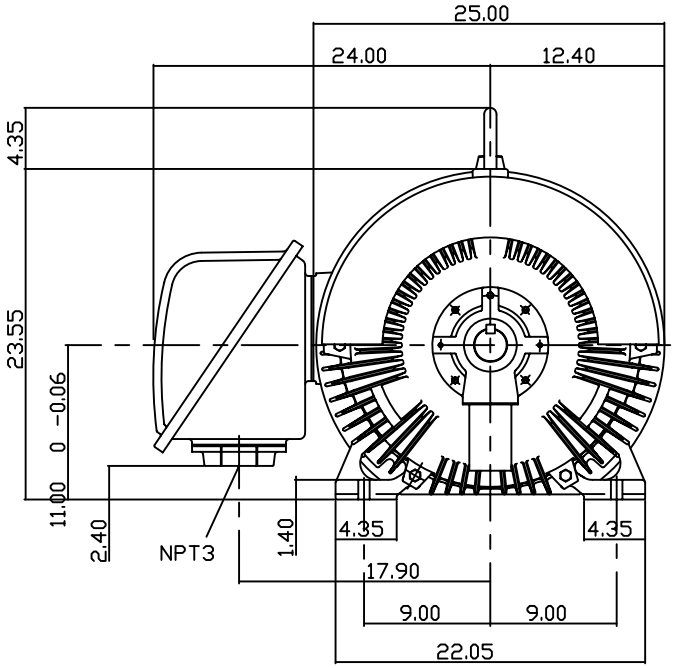

NOTE:

1. DIMENSIONS IN INCH
2. FRAME NO. 449TS
3. F CLASS INSULATION, S.F.1.15
4. FOR DIRECT FLEXIBLE COUPLING
5. ENCLOSURE: IP55
6. BEARING SIZE: DRIVE END: 6314C3
   NON-DRIVE END: 6314C3
7. APPROX. WEIGHT: 2550 LBS
8. NON-SPARKING FAN.
9. NOISE: BELOW 83 DBA AT 1 METER, NO LOAD.

DWN.	T.H.Pan	FEB 18 2005
CHKD.	H.HUANG	FEB 18 2005
APPD.	C.WANG	FEB 18 2005

DATE 06-20-05	OUTLINE DIMENSIONS
CATALOG #HH3002	3-PHASE INDUCTION MOTOR
TECO Westinghouse	DWG NO. 3A040Y703 REV: 00

TW-56C